YORK
BY JOHNSON CONTROLS

LARGE SPLIT AIR - AIR VITALITY SERIES Air Conditioners

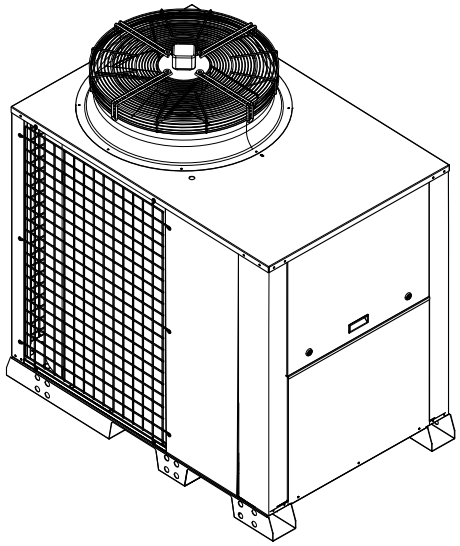

Quick installation guide

Ref.: N-40341_EN 0112

Johnson Controls

Index

1 Quick installation guide....1

1.1 Safety instructions....2
1.2 Icons used in this document....2
1.3 Instructions for storage, transport, loading and unloading of the unit....3
1.3.1 Hoisting points....3
1.3.2 Centre of gravity of the unit....4
1.3.3 Disposal of packaging....4
1.4 Measurements, clearances and accesses....5
1.4.1 Minimum clearance....5
1.4.2 General dimensions, VIR 25A....6
1.4.3 General dimensions, VIR 40A....7
1.4.4 General dimensions, VIR 45A, VIR 60A....8
1.4.5 General dimensions, VIR 75A, VIR 90A....9
1.4.6 General dimensions and accesses (VAC-VAH 20A/25A/30A models)....10
1.4.7 General dimensions and accesses (VAC-VAH 40A/45A/60A models)....11
1.4.8 General dimensions and accesses (VAC-VAH 75A/90A models)....12
1.5 Instructions for installation and connection of the unit....13
1.5.1 Characteristics of the location....13
1.5.2 Characteristics of the facility where the unit will be installed....13
1.5.3 Specifications for the foundation or anchoring of the unit....14
1.5.4 Unit refrigerant connection....14
1.5.5 Connection and preparation of the various connections....18
1.6 Instructions for starting up the unit....22
1.6.1 Electrical checks....22
1.7 Unblocking the unit safely in case of breakdown....23

2 Unit installation data....24

2.1 List of tests for unit start-up....25
2.2 Start-up data....26

1

Quick installation guide

1.1 Safety instructions

This document contains the necessary information for the safe and efficient transportation, assembly and installation of the air conditioning unit. This guarantees the condition of the unit and its operating safety.

Only an authorised company may assemble the air conditioning unit.

ATTENTION

Only authorised companies with the appropriate technical resources and suitably trained personnel may install the air conditioning unit.

CAUTION

The specialists responsible for installing the air conditioning unit must make sure they have all of the information and knowledge required to correctly install, test and deliver the unit. Johnson Controls Inc. shall not be considered responsible for any damage caused by installation of the unit that is no consistent with that described in this document or others specifically provided with the unit.

During regular equipment installation, the fitter must pay special attention to certain situations in order to prevent injuries or damage to the unit.

Situations that could jeopardise the safety of the fitter or that of others nearby or that could put the unit itself at risk are clearly indicated in this manual.

A series of special symbols are used to clearly identify these situations.

Pay careful attention to these symbols and to the messages following them, as your safety and the safety of others depends on it.

1.2 Icons used in this document

DANGER

- *The text following this symbol contains information and instructions relating directly to your safety and physical wellbeing.*
- *Not taking these instructions into account could lead to serious, very serious or even fatal injuries to you and others in the proximities of the unit.*

Information can also be found on safe procedures during unit handling. This will help reduce the risk of accidents.

CAUTION

- *The text following this symbol contains information and instructions relating directly to your safety and physical wellbeing.*
- *Not taking these instructions into account could lead to minor injuries to you and others in the proximities of the unit.*
- *Not taking these instructions into account could lead to unit damage.*

Information can also be found on safe procedures during unit handling. This will help reduce the risk of accidents.

NOTE

- *The text following this symbol contains information or instructions that may be of use or that is worthy of a more thorough explanation.*
- *Instructions regarding inspections to be made on unit parts or systems may also be included.*

1.3 Instructions for storage, transport, loading and unloading of the unit

CAUTION

Outdoor units must be moved and stored vertically to prevent oil from leaking from the compressor.

Delivery inspection

The unit should be carefully inspected for visible damage or abnormalities as soon as it is received.

Any abnormalities or damage to the unit should be communicated to both the transportation and insurance company in writing.

Storage instructions

The unit should be stored in a place suitable to the purpose (warehouse or similar), protected from the weather, water, humidity and dust.

Cover the unit with a canvas of a suitable size.

The unit should be appropriately protected from knocks and dust, ensuring the protective parts it was supplied with remain in place. Where these are not in place, establish the necessary protections and/or barriers to keep vehicles or fork-lift trucks away.

Transport, loading and unloading of the unit

The units should only be handled by personnel from the company responsible for their installation.

Transport of the unit should be in such a manner that no damage is caused by faulty or inadequate mooring to the bed or body of the vehicle.

Where necessary, protect all of the edges of the unit against knocks and scratches and moor it to the bed or body of the vehicle using suitable textile belts or slings to keep it perfectly still.

Loading and unloading the unit from a truck or trailer should be on flat, solid ground using an appropriate crane with sufficient capacity.

1.3.1 Hoisting points

The points designed for hoisting the unit are located on the beams on its base.

Before hoisting the unit, check that the cables or slings are firmly hooked to these points and make sure the crane and the cables or slings are capable of lifting the weight.

Place spacers at the top of the unit to prevent the cables or slings from touching it.

Attach guide ropes so that the unit does not rotate freely.

The cables or slings should be long enough to form an angle of over 45º to the horizontal plane. Hoist the unit keeping it in a horizontal position.

DANGER

There should not be onlookers within a radius of 10 m of the unit when it is being hoisted.

1.3.2 Centre of gravity of the unit

2. Centre of gravity.

3. End of the outdoor coil.

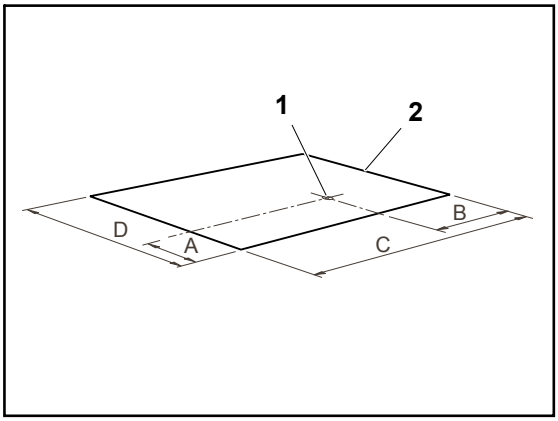

Centre of gravity values table

NOTE

All measurements in mm.

Models	VAC-VAH 20A	VAC-VAH 25A	VAC-VAH 30A	VAC-VAH 40A	VAC-VAH 45A	VAC-VAH 60A	VAC-VAH 75A	VAC-VAH 90A
A	441	441	441	813.5	813.5	813.5	813.5	813.5
B	500	500	500	510	510	510	785	785
C	1354	1354	1354	1453	1453	1453	2099	2099
D	882	882	882	1627	1627	1627	1627	1627

1.3.3 Disposal of packaging

The packaging is recyclable. Dispose of it in the appropriate place or take it to an appropriate collection centre. Respect the regulations in force for this type of waste in the country where the unit is being installed.

Packaging remains must be correctly disposed of. Improper disposal of packaging generates environmental problems that affect human life.

1.4 Measurements, clearances and accesses

1.4.1 Minimum clearance

When installing each unit, clearances should be left for:

1. Intake and discharge of air from the outdoor unit.
2. Connection of drain and electricity pipes.
3. Air ducts.
4. Maintenance servicing.
5. Power supply connections.

VAC - VAH unit

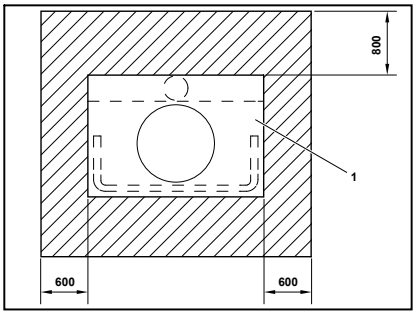

VIR unit

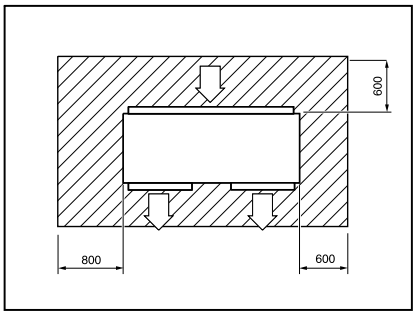

1.4.2 General dimensions, VIR 25A

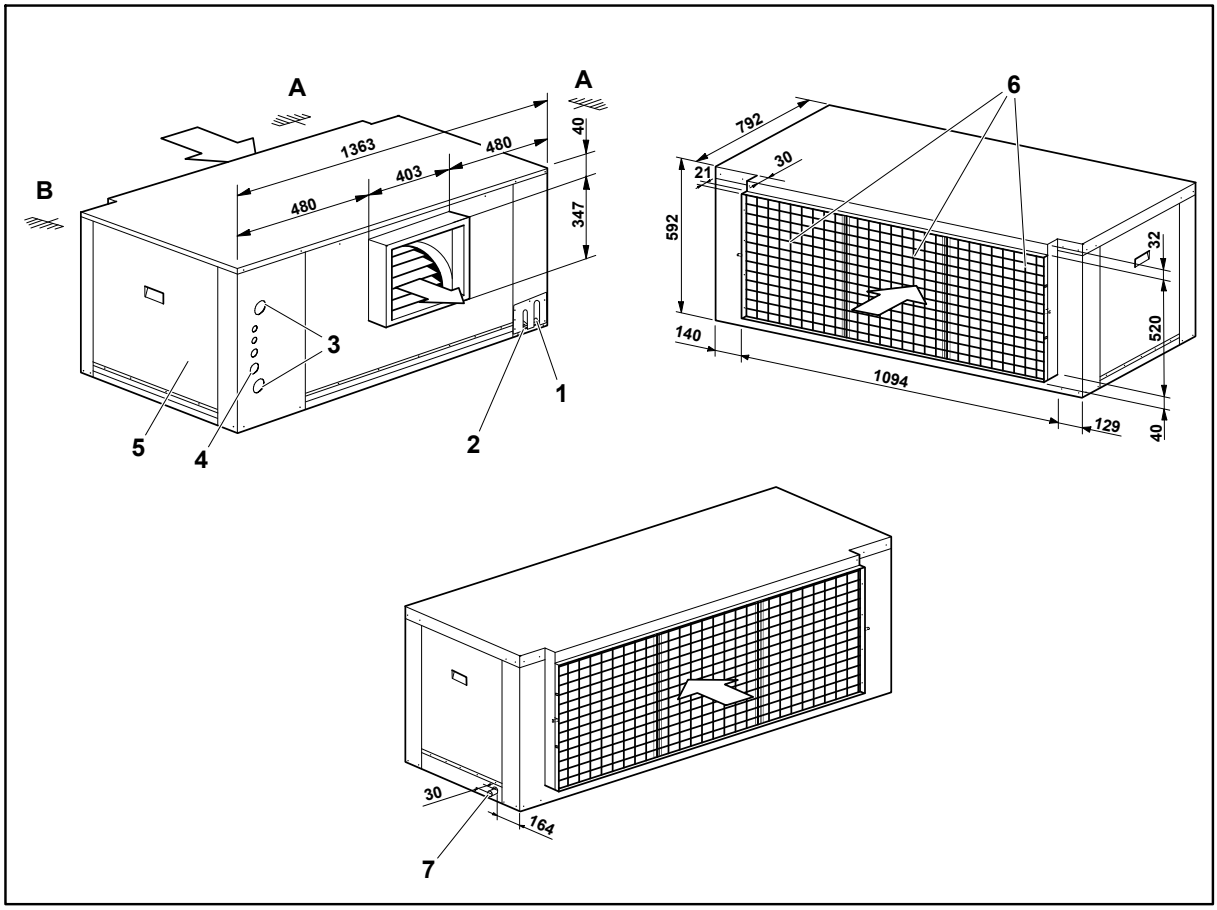

A. Minimum clearance 600 mm
B. Minimum clearance 800 mm
1. Gas connection 1 - 1/8"
2. Liquid connection 1/2"
3. Hot water coil accessory connections
4. Electrical connections
5. Motor access panel
6. Filters
7. Drain pipe (outer diameter 28.5 mm)

1.4.3 General dimensions, VIR 40A

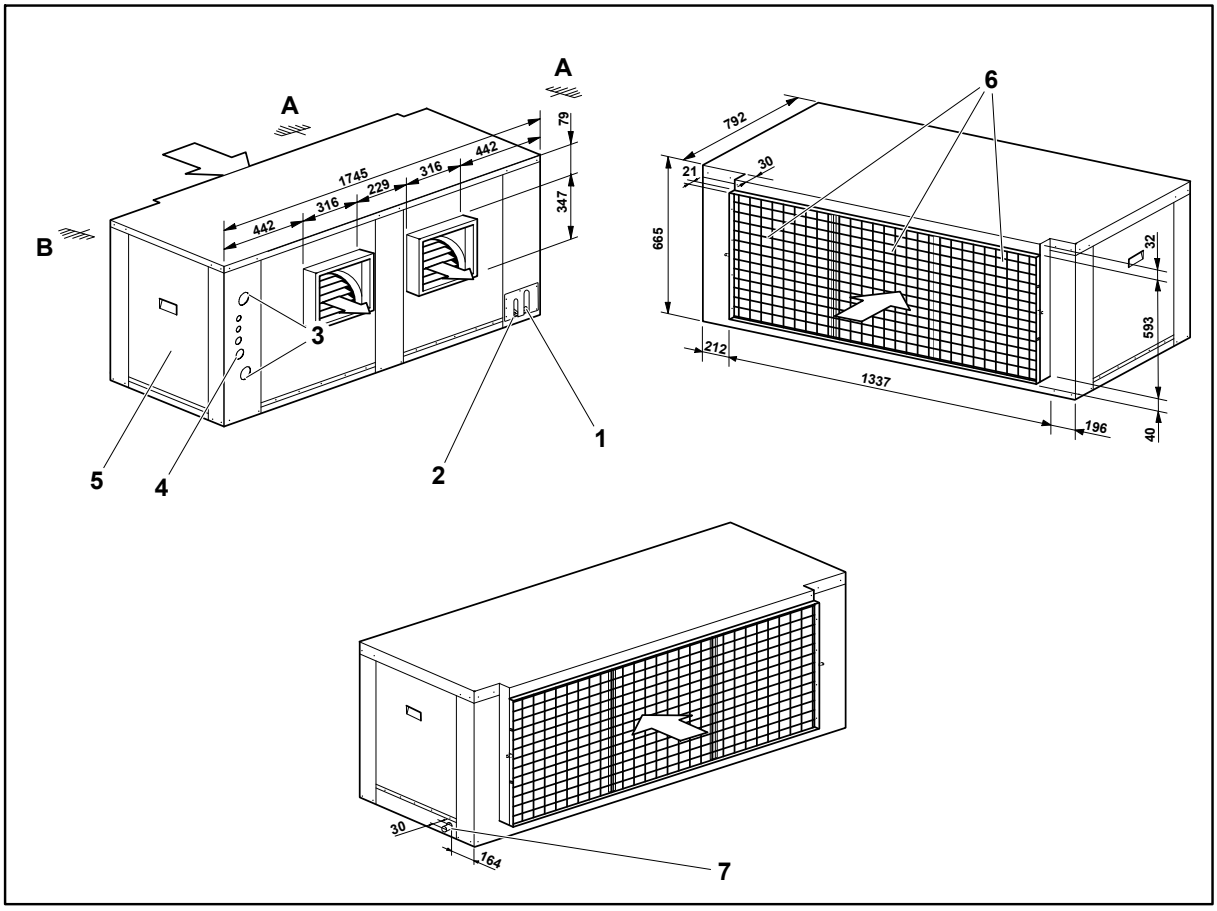

A. Minimum clearance 600 mm
B. Minimum clearance 800 mm
1. Gas connection 1 - 1/8"
2. Liquid connection 5/8"
3. Hot water coil accessory connections
4. Electrical connections
5. Motor access panel
6. Filters
7. Drain pipe (outer diameter 28.5 mm)

1.4.4 General dimensions, VIR 45A, VIR 60A

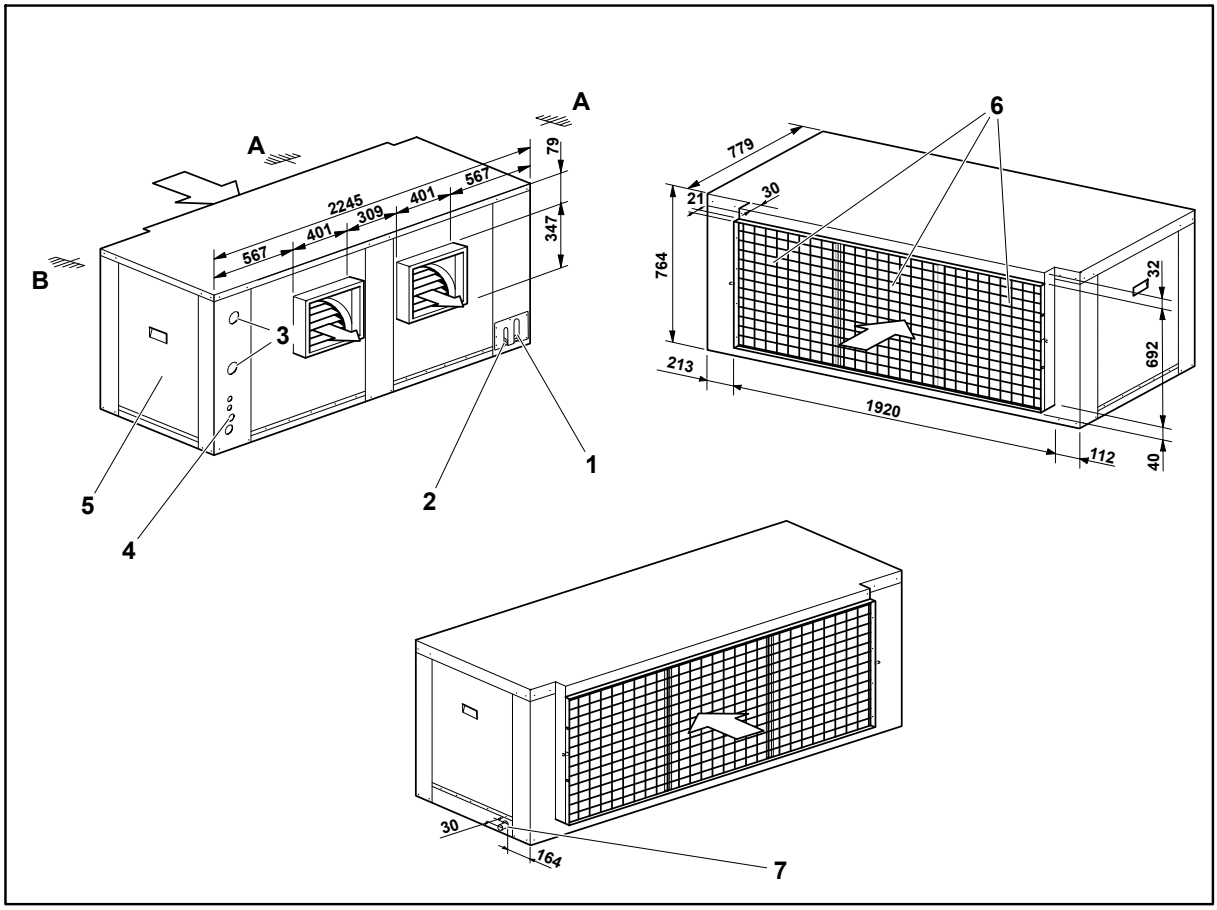

A. Minimum clearance 600 mm
B. Minimum clearance 800 mm
1. Gas connection 1 - 1/8" (x2)
2. Liquid connection 1/2" (45A), 5/8" (60A) (x2)
3. Hot water coil accessory connections
4. Electrical connections
5. Motor access panel
6. Filters
7. Drain pipe (outer diameter 28.5 mm)

1.4.5 General dimensions, VIR 75A, VIR 90A

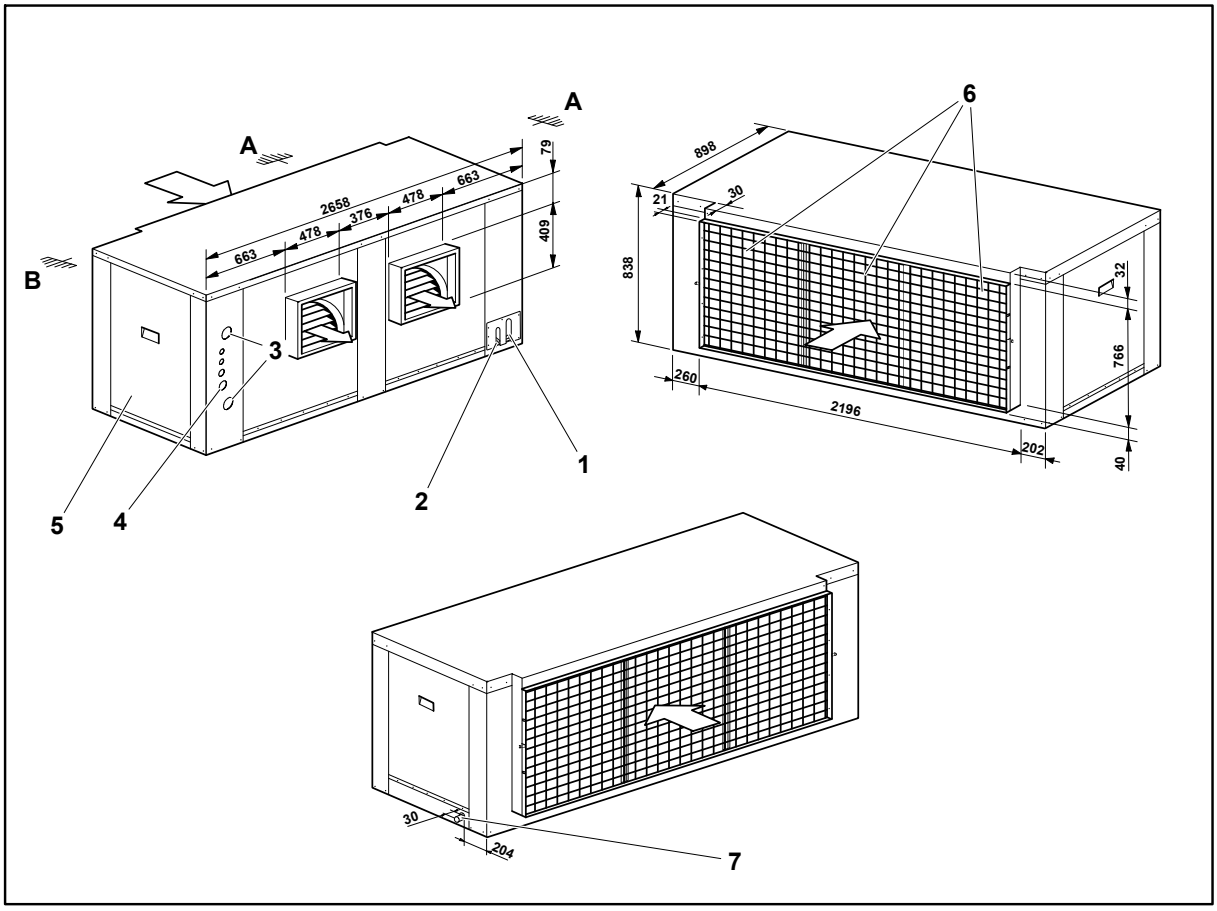

A. Minimum clearance 600 mm
B. Minimum clearance 800 mm
1. Gas connection 1 - 3/8" (x2)
2. Liquid connection 7/8" (x2)
3. Hot water coil accessory connections
4. Electrical connections
5. Motor access panel
6. Filters
7. Drain pipe (outer diameter 28.5 mm)

1.4.6 General dimensions and accesses (VAC-VAH 20A/25A/30A models)

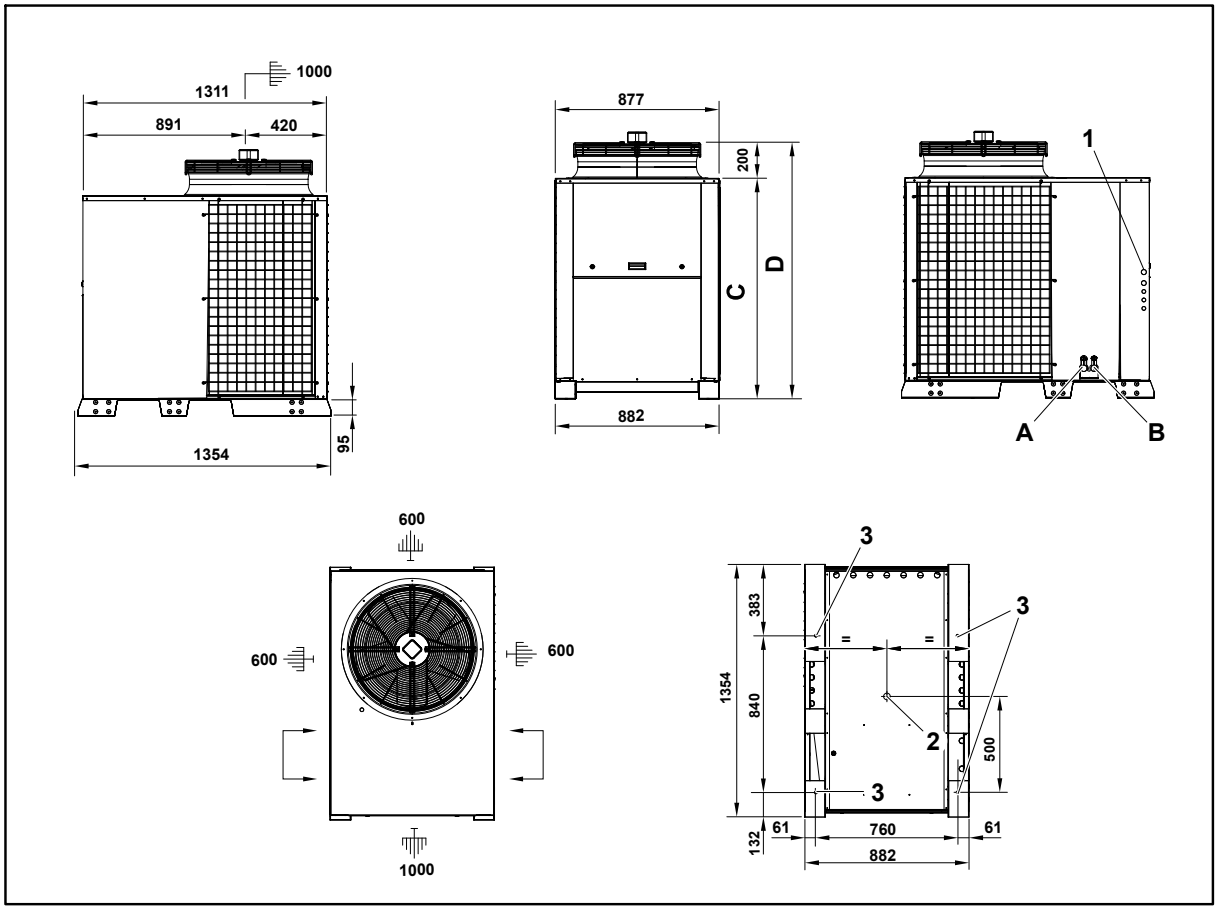

1. Electrical connections
2. Centre of gravity
3. Ø 14 support points

Weight per support point

VAC-VAH 20A/25A:
VAC-VAH 30A:

A. Gas pipe diameter

VAC-VAH 20A/25A:	1 -1/8"
VAC-VAH 30A:	1 -1/8"

B. Liquid pipe diameter

VAC-VAH 20A/25A:	1/2"
VAC-VAH 30A:	5/8"

C.

VAC-VAH 20A:	1030
VAC-VAH 25A:	1030
VAC-VAH 30A:	1182

D.

VAC-VAH 20A:	1230
VAC-VAH 25A:	1230
VAC-VAH 30A:	1382

1.4.7 General dimensions and accesses (VAC-VAH 40A/45A/60A models)

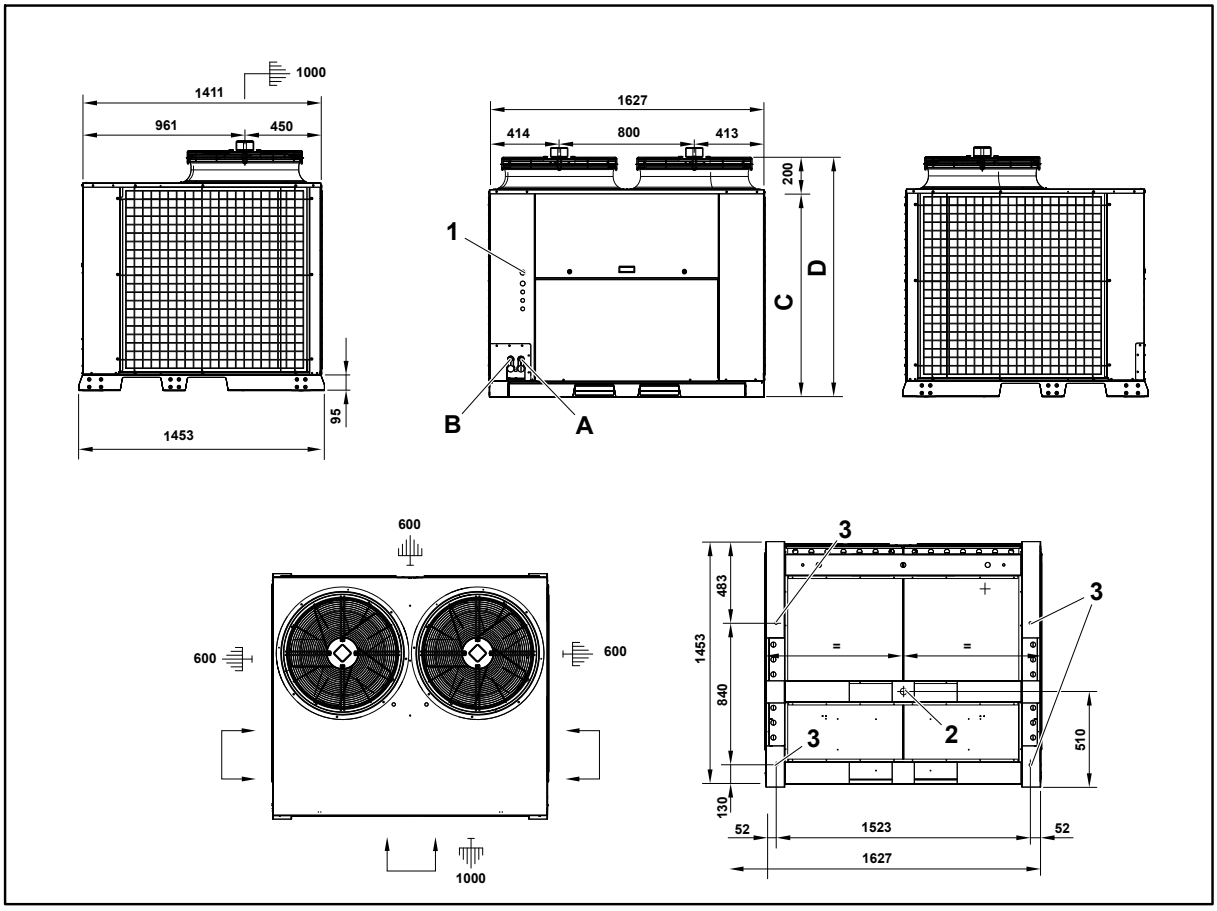

1. Electrical connections
2. Centre of gravity
3. Ø 14 support points

   Weight per support point

   VAC-VAH 40A:

   VAC-VAH 45A:

   VAC-VAH 60A:

A. Gas pipe diameter

VAC-VAH 40A:	1 -1/8"
VAC-VAH 45A:	2x 1-1/8"
VAC-VAH 60A:	2x 1-1/8"

B. Liquid pipe diameter

VAC-VAH 40A:	5/8"
VAC-VAH 45A:	2x 1/2"
VAC-VAH 60A:	2x 5/8"

C.

VAC 40A, 45A, 60A	1178
VAH 40A	1178
VAH 45A, 60A	1229

D.

VAC 40A, 45A, 60A	1378
VAH 40A	1378
VAH 45A, 60A	1429

1.4.8 General dimensions and accesses (VAC-VAH 75A/90A models)

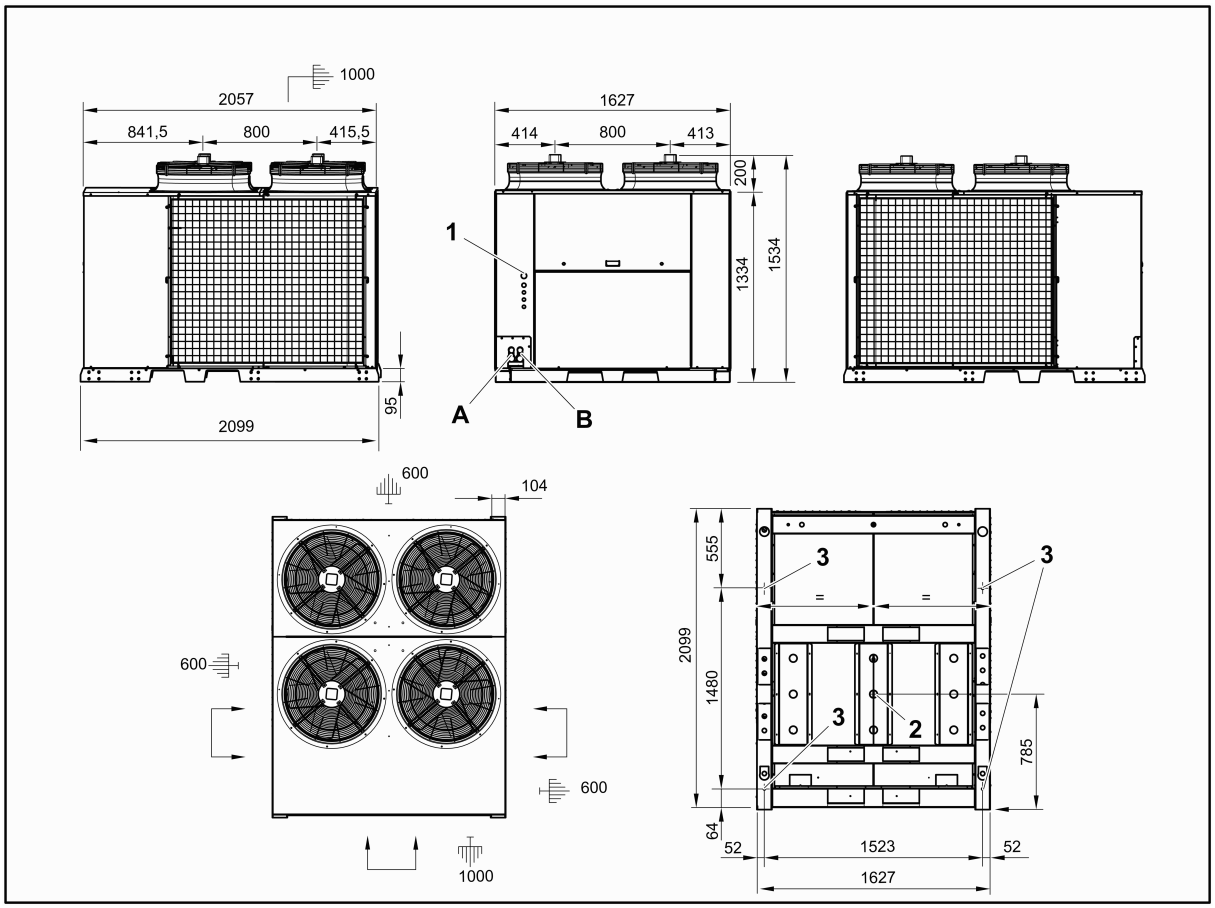

1. Electrical connections
2. Centre of gravity
3. Ø 14 support points
   Weight per support point
   VAC-VAH 75A/90A:

A. Gas pipe diameter
   VAC-VAH 75A/90A: 2x 1-3/8"
B. Liquid pipe diameter
   VAC-VAH 75A/90A: 2x 7/8"

1.5 Instructions for installation and connection of the unit

1.5.1 Characteristics of the location

Location of VIR 25A to 90A indoor units

Locate the indoor unit as close as possible to outdoor walls for easier installation, maintenance and drainage. Make sure the ceiling fastening where the unit is located will withstand its weight.

The unit must be installed completely horizontally or sloping slightly towards the drain side.

Location of VAC/VAH 20A to 90A outdoor units

The location of the unit must be studied to ensure a completely satisfactory installation. To do so, the environmental conditions of the area where the unit is to be installed must be taken into account.

Furthermore, the normal weather conditions should be instrumental in determining the best position of the unit and the hoods, screens or covers required to ensure its correct working order.

If possible, in warm zones like the southern Europe, the unit should be located on the north or east side of the building or property.

The location chosen for the unit must provide the condenser with an unlimited air supply.

As well as the technical data given in this document and any others that are applicable, please bear in mind that the unit has been designed for outdoors installation only.

Where the unit is to be installed at ground level, refer to section *Specifications for the foundation or anchoring of the unit, see on page 14*.

Where the unit is to be installed on the roof of a building or property, make sure that the roof structure can support the weight of the unit plus that of any optional equipment and/or accessories to be fitted.

Special instructions for locations where there is regular snowfall or with ambient temperatures of close to 0ºC or less

In areas where there is regular or sporadic snowfall, the unit must be elevated above the ground or roof where it is installed. The height should be enough to prevent the unit, the condenser and evaporator air inlets and the access to the unit panels from becoming blocked by accumulated snow.

Protection against ice

In areas where the temperature can drop below 0ºC, there must be some kind of additional protection to prevent the water in the condensate drain pipe from freezing.

Use a wire electric heater in the drain trap as well as in the drain, where applicable.

In heat pumps, also use cord heaters in the outdoor coil tray to prevent any ice from accumulating.

Special instruction for locations with high ambient temperatures

In areas where the ambient temperature is over 43ºC, the unit must not be located in direct sunlight and, therefore a specific sunshade will be required.

The installation of a special sunshade over the unit must not affect the air flow required by the unit to work correctly. See *Minimum clearance, see on page 5*.

1.5.2 Characteristics of the facility where the unit will be installed

Indoor unit air ducts

The air duct installation where the unit is to be installed must be formed by a closed return duct system. The additional installation of economisers or outdoor air intakes is not excluded.

To reduce operating noise, the supply and return air duct connections on the unit must be made using flexible joints.

The supply and return air duct systems must be designed for the air flow requirements of the installation. The ducts should not be sized based on the supply and return air connection sizes of the unit.

Hatches should be installed on each discharge duct bypass and where access is planned for cleaning and replacement of filters.

1.5.3 Specifications for the foundation or anchoring of the unit

Where the unit is to be installed at ground level, the characteristics of the ground it will sit on must be taken into account.

Characteristics, such as acceptable surface firmness, must be suitable for the foundation the unit requires.

1.5.4 Unit refrigerant connection

The indoor and outdoor units are connected by coolant pipes that form a sealed coolant circuit.

Pipes to be used

CAUTION

Do not leave compressors or dehydrator filters exposed.

Use K or L-type cooling quality copper pipes, S/ASTMB88.

The pipes must be sealed and insulated until they are connected to the units.

The pipe insulation must be made of a suitable material with a minimum thickness of 8 mm to avoid condensation and minimum temperature loss due to radiation.

Connection pipe installation

DANGER

Do not carry out work outdoors in the event of adverse weather conditions

CAUTION

Do not use stripping products on Cu - Cu joints.

Use rods with a low melting point and a minimum silver content of 5% when welding the pipes. During this process, there must be a current of dry nitrogen inside the pipe to prevent rust and scale from forming that would damage the welding and, therefore, affect the watertightness of the circuit.

NOTE

- *The connection pipes between units must be as short as possible.*
- *No drain traps are necessary where connecting piping specifications are met.*

Cooling layout

The coolant pipes must be connected to the units using pipe flaring.

As indicated in the diagram, a dehydrator filter must be fitted (one or two, depending on model) on the liquid pipe of the installation.

1. Indoor coil
2. Check valve
3. Expansion valve
4. Service valve
5. Suction accumulator
6. Liquid sight glass
7. Expansion valve
8. Check valve
9. Liquid probe
10. Outdoor air probe
11. Outdoor coil
12. 4-way reversing valve.
13. Discharge probe
14. Compressor
15. Suction probe
16. Dehydrator filter (obligatory in the installation)

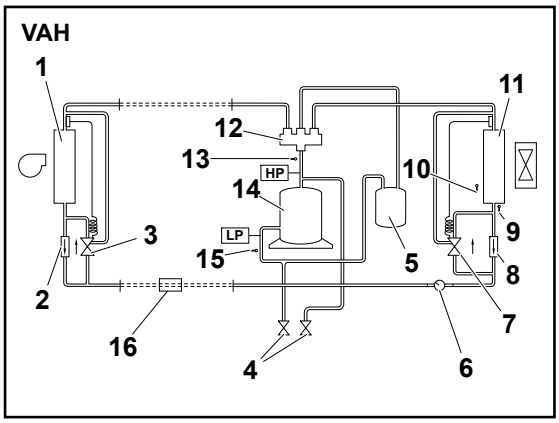

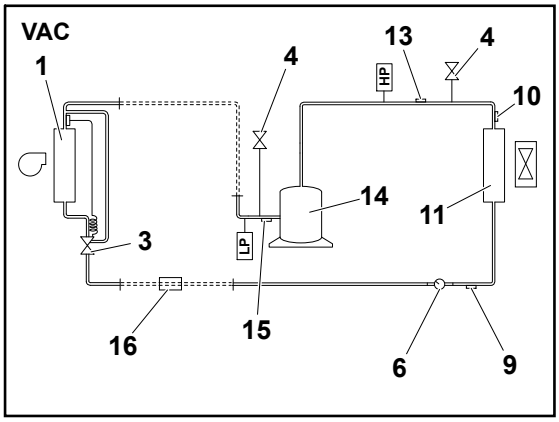

Vacuum and dehydrating

The presence of air and dampness in the cooling circuit must be completely eliminated to avoid:

- Damage to the compressor and other parts of the cooling circuit.
- A drop in unit performance.
- Capillary blocking due to freezing.
- Unwanted high pressure increases.
- Increased electricity consumption.

NOTE

Prior to the vacuum process, nitrogen gas can be swept through the system to remove most of the dampness and other contaminants in the cooling circuit. The vacuum should be broken on several occasions using nitrogen to ensure dampness is eliminated.

The vacuum is ensure in each cooling circuit as follows:

1. Connect the vacuum pump to the service valves **-1-** on the installation and connect the service manometers to the valve stems (¼" valves) **-2-** in the circuit.
2. Open the stopcocks on the service valves and the vacuum pump.
3. Activate the vacuum pump.
4. Vacuum to at least 50 microns.
5. Detect leaks.

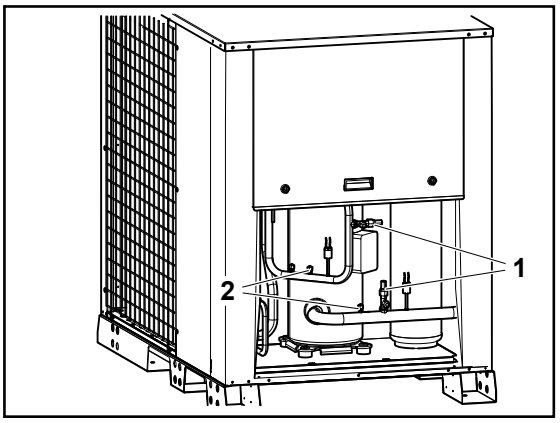

Coolant charge

DANGER

Due to its characteristics, R-410A coolant must only be handled by qualified personnel.

NOTE

The unit is not supplied charged

The refrigerant charge is calculated for a 7.5 m length of piping. In installations with longer (or shorter) lengths, add (reduce) coolant as indicated in the table below.

In installations with connection piping in excess of 25 m in length, 30 g of oil must be added for every additional metre.

Follow the instructions below to add or charge coolant to the cooling pipes:

NOTE

The coolant charge must be weight-controlled using scales. The coolant must be charged in liquid phase to ensure the components forming it are inserted in the correct proportions.

1. Connect the coolant cylinder to the low pressure or gas intake.
2. Open the stopcocks and allow the coolant to enter the pipes.

NOTE

Once the coolant has been correctly charged, the subcooling temperature (at the expansion valve inlet) must be approximately 1 ºC and the overheating temperature between 5 and 10 ºC.

A	Liquid cooling line.
B	Gas cooling line.
H	Vertical distance between units (max. 30 m).
L	Total pipe length (vertical + horizontal sections). Laid and in one direction.
1	Outdoor unit.
2	Indoor unit.

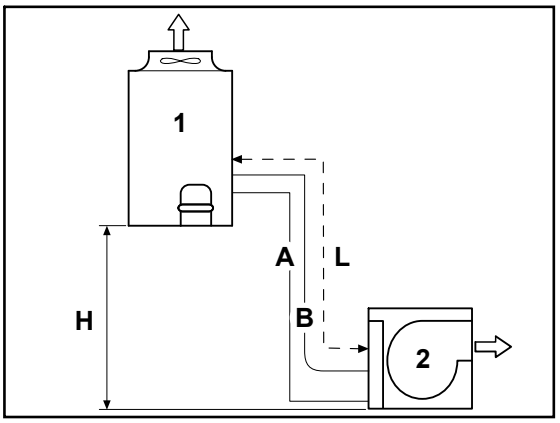

A	Liquid cooling line.
B	Gas cooling line.
H	Vertical distance between units (max. 30 m).
L	Total pipe length (vertical + horizontal sections). Laid and in one direction.
1	Outdoor unit.
2	Indoor unit.

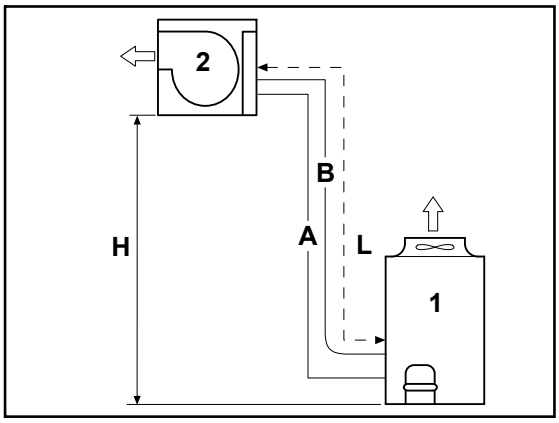

Maximum length L: this is the sum of the lengths of all straight horizontal and vertical sections in one direction, whether they hold liquid or gas.

Maximum equivalent length L_E: this is the sum of the lengths of all straight horizontal and vertical sections in one direction, whether they hold liquid or gas, plus the equivalent length of the accessories, basically elbow joints and bends.

CALCULATION EXAMPLE

1	Outdoor unit.
2	Indoor unit.
3	½" liquid pipe.
4	1 ⅛" gas pipe.
A, B, C, D	Elbow joints (4)
E	Bends (2)

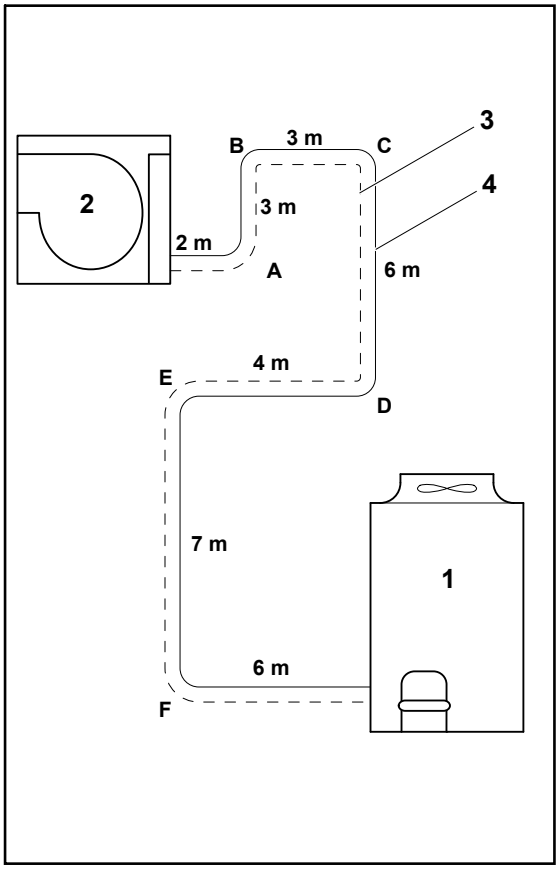

L = 2 + 3 +3 + 6 + 4 + 7 + 6 = 31

31 < 50 is therefore correct

To calculate the equivalent length of the interconnection piping and as for the charge loss calculation, use the data of one of the liquid lines, i.e. ½" outer diameter. As can be seen in the diagram, there are four elbow joints with an equivalent length of 0.5 m according to the table and two 0.4 m bends according to the table, to check that the equivalent length of piping does not exceed the accepted maximum:

L_E = 2 + 3 + 3 + 6 + 4 + 7 + 6 + 4·(0.5) + 2·(0.4) = 33.8 m

33.8 < 60 is therefore correct.

EQUIVALENT LENGTH ACCESSORIES IN METRES

Outer pipe diameter	Short elbow joint radius	90º bend (Long radius)
3/8"	0.30	0.20
1/2"	0.40	0.30
5/8"	0.50	0.40
3/4"	0.50	0.40
7/8"	0.60	0.50
1 ⅛"	0.70	0.60
1 ⅜"	1.00	0.70
1 ⅝"	1.20	0.80

NOTE

The 45º elbow joints and bends (used in drain traps, for example) have half the equivalent length of the 90º bends.

Coolant charge according to piping diameter

Model	Rated R-410A charge (kg)	No. of circuits	Gas line diameter	Liquid line diameter	Additional charge (g./m)	L (m)	L_E (m)
VAC 20A / VIR 25A	12	1	1 - 1/8" (28.5 mm)	1/2" (12.7 mm)	112	50[1]	60
VAH 20A / VIR 25A	12						
VAC 25A / VIR 25A	12.5	1	1 - 1/8" (28.5 mm)	1/2" (12.7 mm)	112	50[1]	60
VAH 25A / VIR 25A	12.5						
VAC 30A / VIR 40A	12.5	1	1 - 1/8" (28.5 mm)	5/8" (15.87 mm)	170	50	60
VAH 30A / VIR 40A	12.5						
VAC 40A / VIR 40A	13.5	1	1 - 1/8" (28.5 mm)	5/8" (15.87 mm)	170	50	60
VAH 40A / VIR 40A							
VAC 45A / VIR 45A	11x2	2	1 - 1/8" (28.5 mm)	1/2" (12.7 mm)	112	50	60
VAH 45A / VIR 45A							
VAC 60A / VIR 60A	12.5x2	2	1 - 1/8" (28.5 mm)	5/8" (15.87 mm)	170	50	60
VAH 60A / VIR 60A	12x2						
VAC 75A / VIR 75A	15.5x2	2	1 - 3/8" (35 mm)	7/8" (22 mm)	333	50	60
VAH 75A / VIR 75A	15.5x2						
VAC 90A / VIR 90A	15x2	2	1 - 3/8" (35 mm)	7/8" (22 mm)	333	50	60
VAH 90A / VIR 90A	15x2						

L: maximum length on straight connection pipe sections.

L_E: maximum equivalent length of unit connection pipes.

[1]: As of a total sum of 20 metres in length on straight connection pipe sections (horizontal and vertical) between units, a suction accumulator of at least 7 litres must be fitted on the gas line.

1.5.5 Connection and preparation of the various connections

Electricity. Power and control

POWER LINE

Power must be supplied to the unit through a specific power supply line with an exclusive power control and differential breaker, installed in line with national and local regulations.

NOTE

For further information on this subject, always keep the current regulations for the country where the unit is being installed at hand.

Make sure that the electricity supply line has enough capacity to power the unit. Its length, the cable diameter and their protection (cover or jacket) should be appropriate for the unit.

Use a multimeter to check that the supply voltage remains within the accepted limits.

To install the power cable, loosen the closures **-1-** by 1/4 turn and remove the electrical board panel.

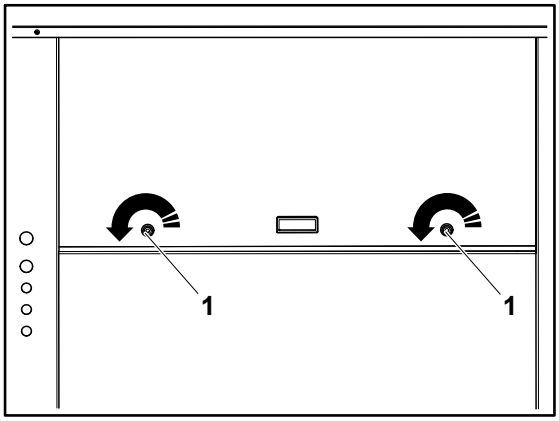

Press the appropriate openings on the edge of the unit **-1-** until they are released.

Fit packing glands to fit the cable and pull the cable through to the inside of the electrical panel through the grommets in the tray **-2-**.

Connect the cable to the input connections indicated and firmly tighten the securing bolts. Also consult the Wiring Diagrams.

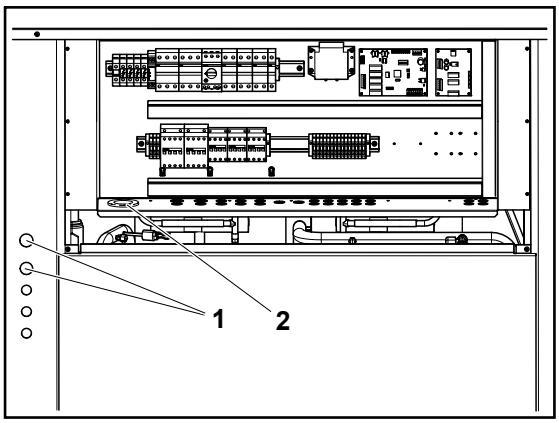

NOTE

The complete wiring diagram for the unit is attached to the inside of the electrical panel.

The electrical panel is fitted with a phase detector to ensure the electrical connection follows the sequence of phases R-S-T. Where the connection does not respect this sequence, the electronic control circuit remains disconnected and the unit will not start.

To correct the phase sequence, change the position of two of the three unit power cables on the input terminals.

CONTROL LINE

Passing the power and control cables through the front of the unit.

Press the appropriate openings on the edge of the unit **-1-** until they are released.

Fit packing glands to fit the cable and pull the cable through to the inside of the electrical panel through the grommets in the tray **-2-**.

Connect the cable to the terminals indicated and firmly tighten the securing bolts. Also consult the wiring diagrams for the unit and *Wiring diagrams, see on page 21*.

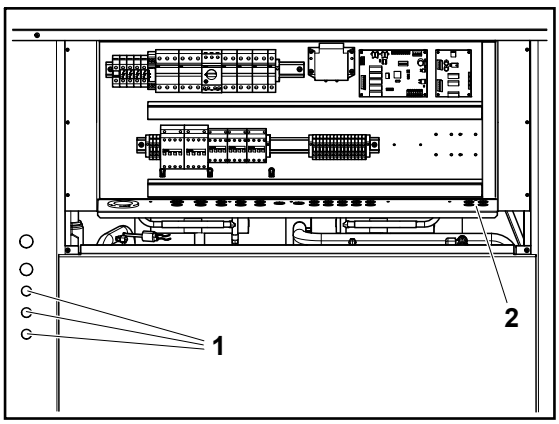

NOTE

The complete wiring diagram for the unit is attached to the inside of the electrical panel.

THERMOSTAT CONNECTION

The outdoor unit and the thermostat are connected by means of a 10-pin x 0.22 mm^2 shielded communication cable. Connect the cable to the terminals indicated and firmly tighten the securing bolts. Also consult the wiring diagrams for the unit and *Wiring diagrams, see on page 21.*

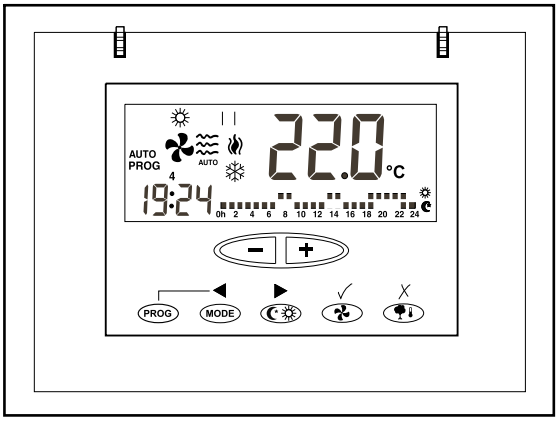

Wiring diagrams

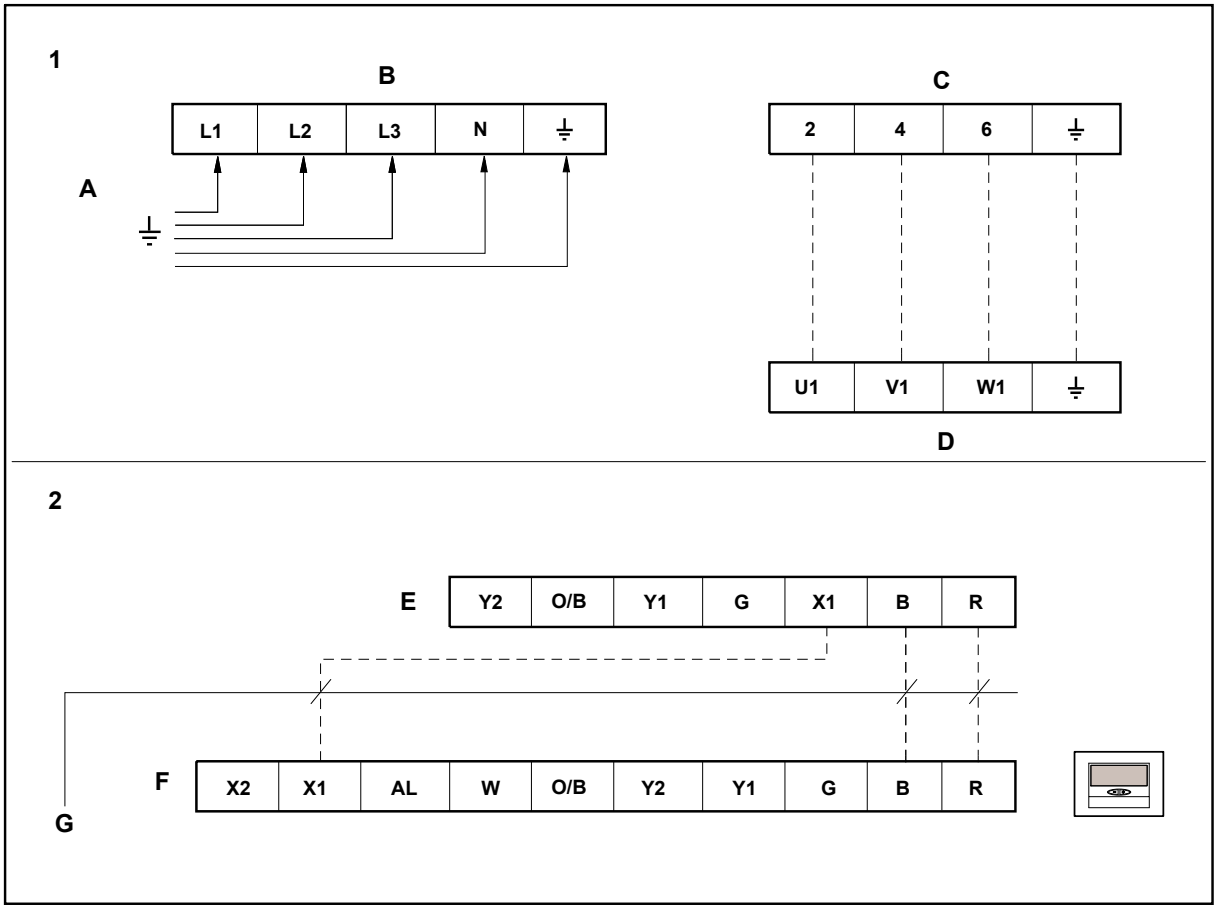

1. Power connection
2. Thermostat connection

A. Main power supply
B. Outdoor unit
C. Contactor
D. Indoor fan motor (star connection)
E. Outdoor unit terminal strip
F. Thermostat DPC-1
G. 10-pin shielded communications cable x 0.22 mm^2

Condensates. Insulation and/or protection of ducts

Condensates should be released by means of a specific installation in line with local or national regulations.

NOTE

For further information on this subject, always keep the current regulations for the country where the unit is being installed at hand.

Install a drain trap on the exhaust outlet of the unit. The drain trap must have an access register **-1-** to facilitate emptying and cleaning when necessary.

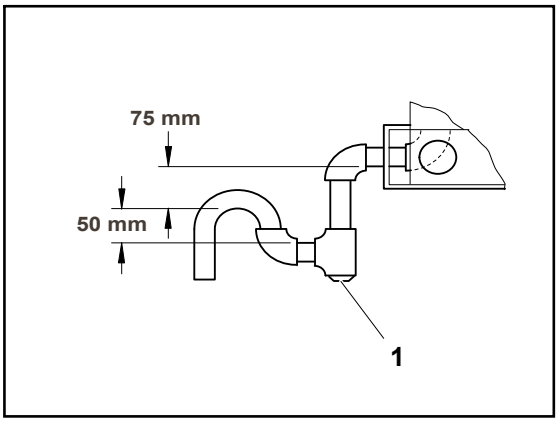

Lay the condensate drain pipe from the connection at the bottom of the unit to a nearby drain.

NOTE

- *The condensate drain pipe should be at a minimum gradient of 2% (2 cm of drop for each metre in length).*
- *The condensate drain pipe must be correctly insulated.*

Protection against ice

In areas where the temperature can be 0ºC or less, there should be some kind of additional protection to prevent the water contained in the condensate drain pipe from freezing.

An electric heater (wire heater) should be installed in the drain trap and in the condensate drain pipe.

For units with heat pumps, heating elements must also be installed in the outdoor coil tray to prevent possible ice accumulation.

1.6 Instructions for starting up the unit

1.6.1 Electrical checks

DANGER

- *All side panels except for that of the electrical box, must be fitted, closed and secured with their corresponding locks before turning the general switch on the unit.*
- *The unit has a remote control, which means that the fan turbine may start unexpectedly.*

CAUTION

Loose connection terminals produce overheating of cables and terminals. The unit will work incorrectly and there is a risk of fire.

Check that the cables are firmly secured to their connection terminals.

CAUTION

Do not start the unit until all installation work has been completed.

Initial connection of the unit

Once all of the planned accessories are installed, and before starting the unit, its general switch on the installation must be turned on.

Press the "Test" button for two seconds so that the unit recognises the installed accessories. When the recognition process is complete, the red pilot light switches off.

YKN2 Open control board

The unit control software is in the YKN2 Open control board. The control algorithm can be configured or changed by:

- The position of the micro-switches.
- The connection of accessories detected by the board.

The control board indicates the faults detected by means of the red V3 LED on the board or the fault codes indicated on the DPC-1 thermostat.

NOTE

For further information, see the technical information on the YKN2 Open control board.

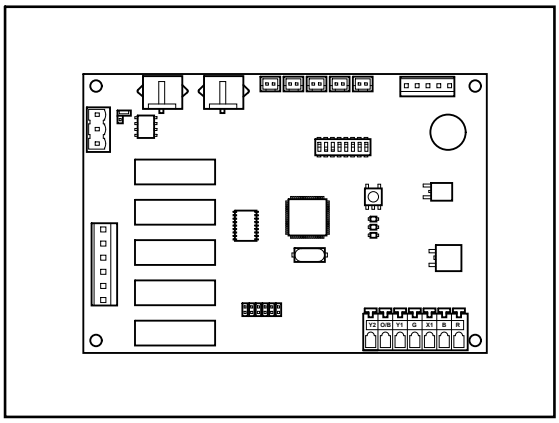

Rotating direction of the Scroll compressors

The Scroll compressors and the fans only operate correctly if they rotate in the correct direction. All of the motors and compressors in the unit are connected so that they rotate correctly.

If the compressors are not connected correctly and are rotating in the wrong direction:

- The compressor will not compress.
- Operating noise will be abnormal.
- Electricity consumption (A) will be low.
- They overheat.

1.7 Unblocking the unit safely in case of breakdown

DANGER

- *All side panels except for that of the electrical box, must be fitted, closed and secured with their corresponding locks before turning the general switch on the unit.*
- *The unit has a remote control, which means that the fan turbine may start unexpectedly.*

To unlock the unit, see "Restarting the HVAC unit in case of fault" in the User Manual.

If the thermostat display keeps showing the pilot light **-1-** and any fault code **-2-** or if the air conditioning unit does not start, contact a Johnson Controls Inc. Authorised Technical Assistance Service.

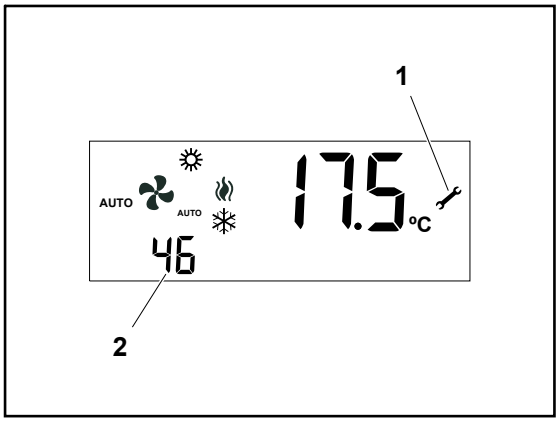

2

Unit installation data

Please complete the following data to register the full details of the installation and the start-up inspection.

Complete the blank fields or mark the appropriate box, as applicable.

2.1 List of tests for unit start-up

Please complete the following forms to register the full details of the installation and the start-up inspection.

Complete the blank fields or mark the appropriate box, as applicable.

Company performing installation:

Company performing installation:	
Installing technician:	
Name / project number:	
Location of the unit:	
Address of the unit location:	
Person in charge of the building or property where the unit is installed:	
Installation work start date:	
Unit model number:	
Unit serial number:	
Plate and version:	
Thermostat, model and version:	

General inspection of the unit

	Visual appearance
	Levelling of the unit
	Check the unit for transport, loading and unloading damage
	Unit installed with sufficient clearance
	Check the circuit for the presence of oil (large coolant leaks).
	Terminals and connections correctly secured in the control panel and accessories
	Air filters installed
	Condensate drain pipe and drain trap installed correctly
	Thermostat and connection cabling installed correctly
	Air duct installation complete and correct
	Accessories and planned options installed (if applicable)

Inspection of the air supply fan

	Drive belt and pulleys aligned and correctly fastened
	Drive belt tension correctly adjusted
	Verification of direction of rotation

Inspection of compressors

	Verification that direction of rotation is correct

2.2 Start-up data

Electrical data

	Rating plate	Actual
Power supply	Check specifications in the Installation Manual	
Control voltage		
Fan consumption (A)		
Consumption of condenser fan 1 (A)		
Consumption of condenser fan 2 (A)		
Consumption of compressor 1 (A)		
Consumption of compressor 2 (A)		
Consumption of supply fan (A)		
Electric heater 1 (Optional)		
Electric heater 2 (Optional)		

Cool and heat modes

Refrigerant circuit. Compressor 1			
Mode		Value	
Subcooling (min. 8 K, max. 18 K)		°C	Liquid pressure: _____ bar
			Liquid temperature: _____ °C
Overheating (min. 4 K, max. 10 K)		°C	Suction pressure: _____ bar
			Suction temperature: _____ °C
	Complete liquid line checked in sight glass		
	Correct oil level checked in sight glass		

Refrigerant circuit. Compressor 2			
Mode		Value	
Subcooling (min. 8 K, max. 18 K)		°C	Liquid pressure: _____ bar
			Liquid temperature: _____ °C
Overheating (min. 4 K, max. 10 K)		°C	Suction pressure: _____ bar
			Suction temperature: _____ °C
	Complete liquid line checked in sight glass		
	Correct oil level checked in sight glass		

Air flow rate values

	m^3/h
Design	
Measured	

Air temperature

Mode (cool or heat):	Temperature (°C)
Outdoor air:	
Supply air:	
Return air:	
Indoor air mix (if economiser is fitted):	

Options

Heating mode (hot water coil)	
Air temperature	
Capacity: _____ (kW)	Temperature (°C)
Supply air (at 100 %)	
Return air	

Hydraulic circuit		
	Temperature (°C)	Pressure (bar)
Water inlet		
Water outlet		

Others

Outdoor fan 1	Type or model	
		Surge protection adjusted

Outdoor fan 2	Type or model	
		Surge protection adjusted

Indoor fan	Type or model	
		Surge protection adjusted

Belts	Type or model	
Economiser		Minimum outdoor air setting

Notes and observations

Notes and observations:	
Installed by:	Name Date and signature